PM 4228-212

Product specification – product no. 94131002-01

Your partner since 1655

ANKARSRUM

Technical data

Rated voltage	24 VDC
Gear ratio	24:1
No-load speed (after 20min ref. only)	210 rpm
No-load current (after 20min ref. only)	1,2 A
Speed (after 20min with 1,5Nm load)	200 rpm ±10%
Current (after 20min with 1,5Nm load)	3,3 A max
Allowed gear-box temperature	85 °C
Degree of protection	IP20
Motor weight	Ca 1,0 kg
Optical encoder	60 cpr
Pulse shift order	/A/B
Encoder specification	EO-7-60

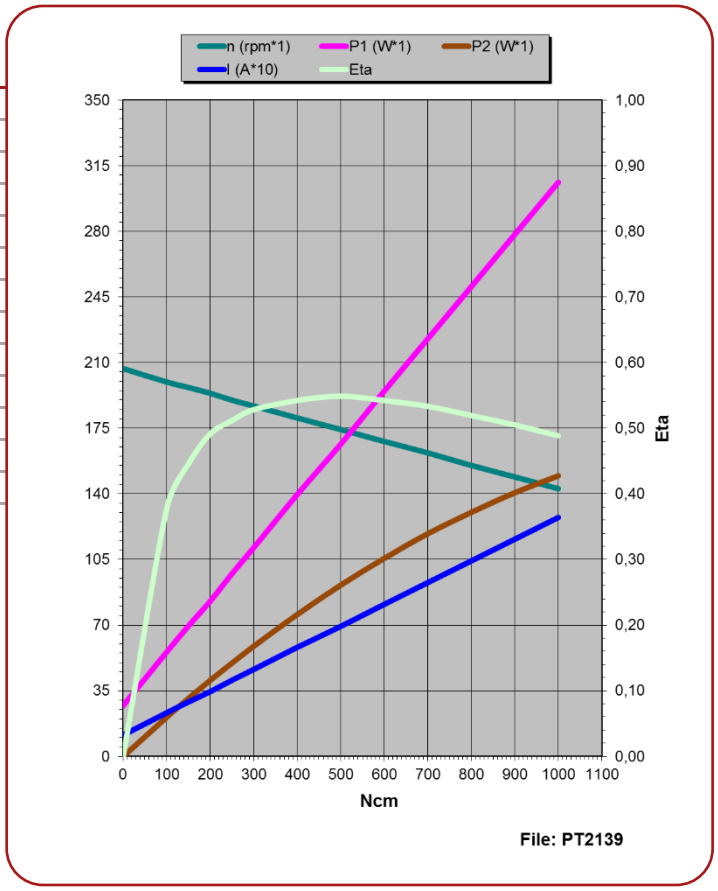

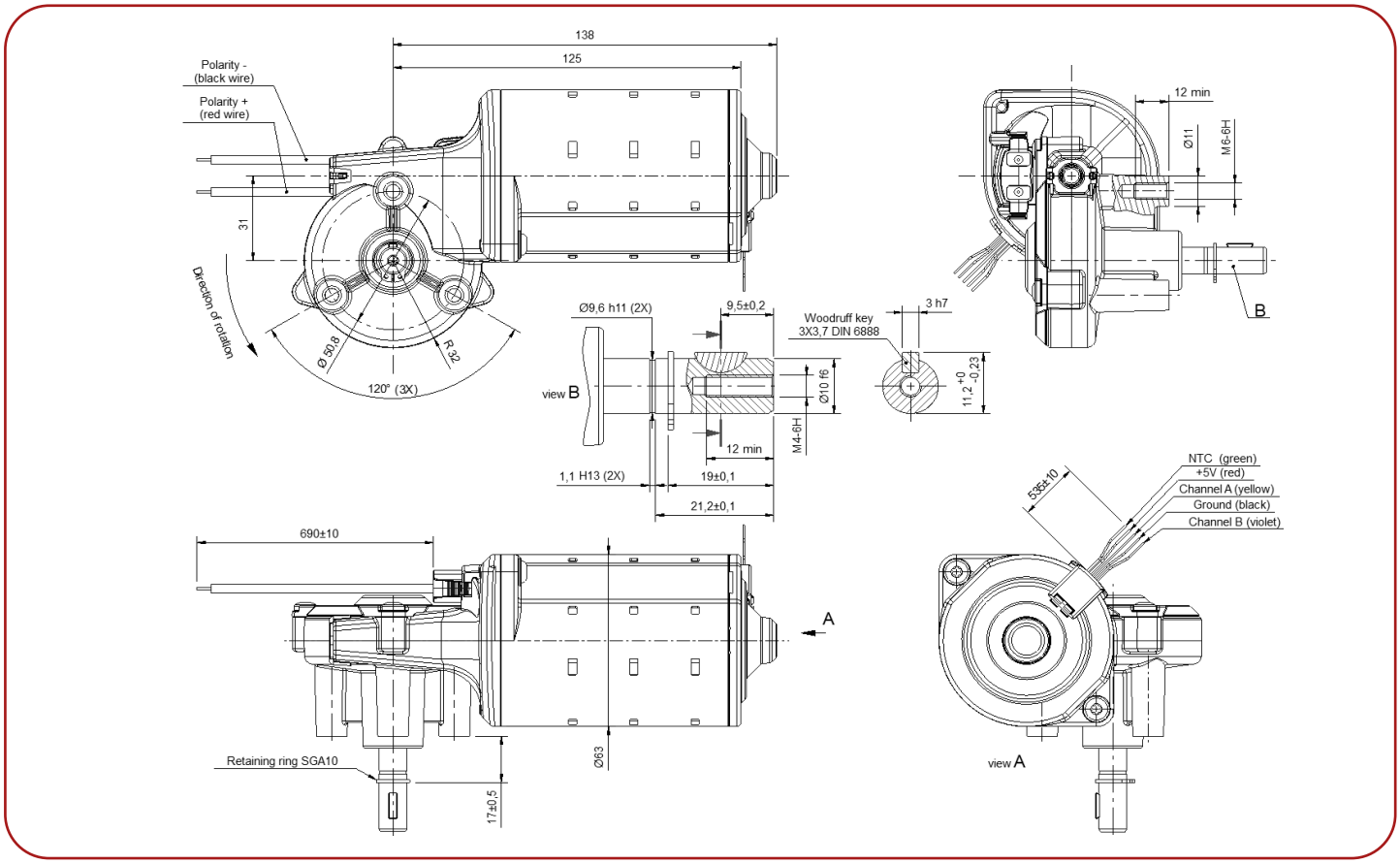

Ankarsrum Motors AB
Bruksvägen 1
SE-593 70 Ankarsrum
Sweden

Phone: +46(0)49053300
Fax: +46(0)49050990
Email: info@ankarsrummotors.com
www.ankarsrummotors.com